business@danau.cn

DBQ SERIES

C3 VERSION

Motor Direct Drive

HOLLOW SHAFT

BORE 28mm

KEY 8.0mm

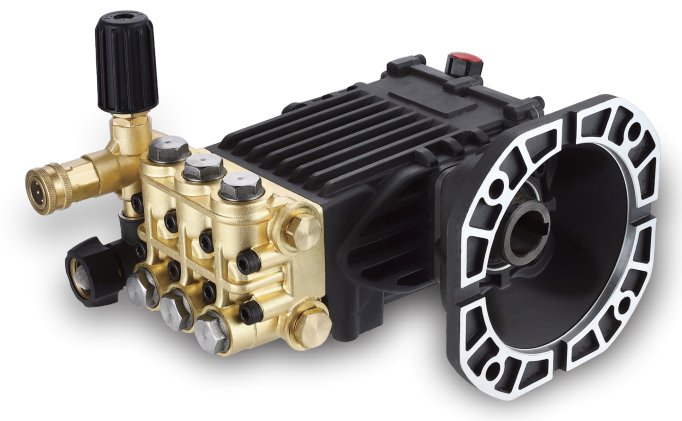

APPLICATIONS. Consult us for more

PRESSURE WASHING | MISTING AND FOG MAKING | HOT WATER APPLICATION | HIGH PRESSURE COOLANT | WATER TREATMENT | WATER JET CUTTING

COMPONENTS

MANIFOLD Brass Forged | **CRANKCASE** Aluminum Alloy | **CRANKSHAFT** Forged Steel Alloy | **CONNECTING ROD** Aluminum Alloy | **PLUNGER** Coating Ceramic | **PACKING** U Type Dual Seal

TECHNICAL DATA

Manifold:	Brass forged
Crankcase:	Die-cast aluminum alloy, anodized
Connecting Rod:	One piece aluminum alloy
Plunger:	Ceramic coating, precision grinded.
Packing:	U type, high-low dual pressure packing
Bearing:	Dual tapered roller bearing
Crankshaft:	Forged steel alloy, heat treatment, multiple process grinded

Head Port:	Inlet 3/8", Outlet 1/2"
Unloader:	Banjo bolt, trap type
Unloader Port:	Inlet 3/4" (BSP or NH), Outlet 3/8" Quick Connect
Oil Bath Capacity:	550ml (half level of oil gauge),
Oil Type:	15W/40 Non-Detergent
Water Inlet Pressure:	0-50psi/3.5bar
Max Inlet Water Temp.	≤ 50°C/122°F

MODEL	MAX FLOW		MAX PRESSURE		POWER INPUT	POWER SPEED	WEIGHT	SHIPPING SIZE
	GPM	LPM	PSI	BAR	KW	RPM	KG	CM
DBQ-18146C3	4.2	16	3330	230	7.5	1450	10.8	32x28.5x26
DBQ-20146C3	5.2	20	2720	188	7.5	1450	10.8	32x28.5x26
DBQ-22146C3	6.3	24	2240	155	7.5	1450	10.8	32x28.5x26
DBQ-25146C3	8.2	31	1740	120	7.5	1450	10.8	32x28.5x26
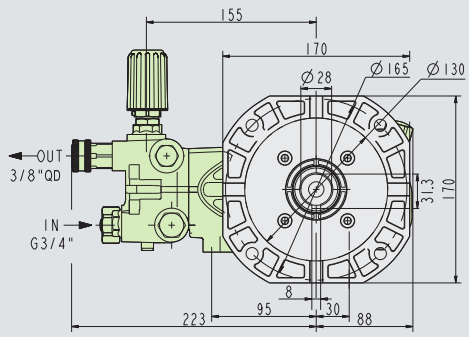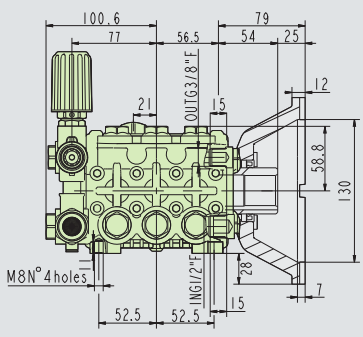
OVERALL DIMENSION